HIPRES© HP1400/1500

High Pressure Transmitter with RS - 485 Interface (Proprietary or Modbus RTU Protocol)

- Pressure ranges to 5,000 bar
- Pressure diaphragm and process connection is machined from one piece of Titanium with no seals or welds for high pressure integrity
- High resistance to overpressure and pressure transients
- Silicon-on-Sapphire (SOS) sensor technology for outstanding performance and reliability
- High accuracy option
- RS-485 communication up to 1200 m

RoHS 2011/65/EU

CE | UK CA

The advanced sensor design consists of a piezoresistive silicon strain gauge circuit, which is epitaxially grown onto the surface of a sapphire diaphragm to form a single crystalline structure. The sapphire sensor element is then molecularly bonded to a titanium alloy sub-diaphragm.

This enables the sensor to endure higher over-pressures and provides superb corrosion resistance. The sensor exhibits virtually no hysteresis and excellent long-term stability over wide temperature ranges.

Phone: 1-800-473-7313
Email: sales@sucoesi.com

SUCO GROUP

SUCO ESI North America

Hipres® HP1400/1500 RS-485 High Pressure Transmitter

Specifications

The HIPRES© HP1400/HP1500 series has been developed with RS-485 or Modbus RTU interface for very high pressure applications, providing fast and noise-free point to point communication, with operating ranges up to 5,000 bar.

The HP1400 provides a half-duplex digital RS-485 output signal and 0-5V analog output, while the HP1500 provides Modbus RTU output signal and 0-5V analogue output. All versions utilise ESI's outstanding Silicon-on-Sapphire sensor featuring all titanium wetted parts for excellent media compatibility and rugged, reliable performance. They provide high stability and repeatability and can be configured to suit a multitude of applications. Each transmitter can be allocated a unique device address and connected in series to other transmitters and devices on the same communications link. It is also compatible with ESI-USB software.

Digital accuracy is 0.15%, with an exceptional overpressure limit. All models are supplied with High Pressure F250C Autoclave connection. The titanium alloy wetted parts offer unbeatable corrosion resistance and the M12 electrical connection is rated IP67 for high levels of environmental protection.

Typical applications include:

- Process control
- Industrial automation systems (IAS)
- Laboratory and test
- Leak testing and continuous monitoring
- Oil and gas monitoring equipment

Dimensions (in mm)

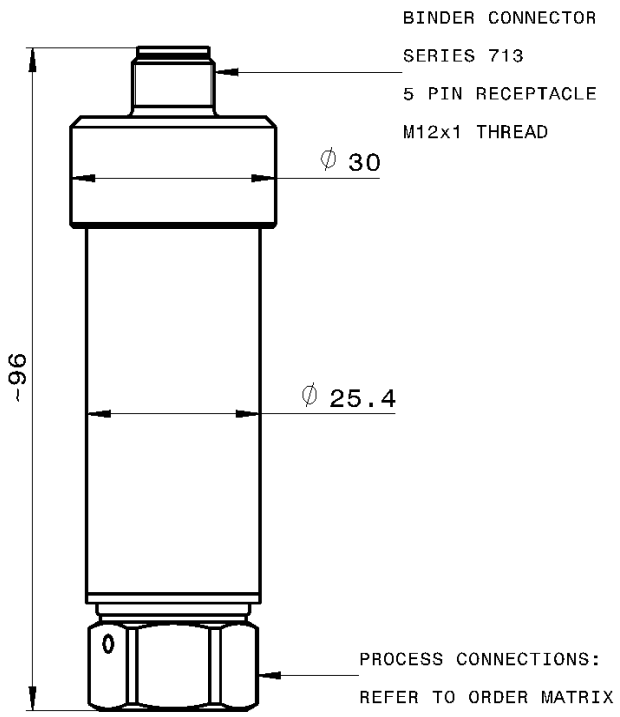

Electrical Connections

Pin No.	Designation
1	RS485(B)
2	RS485(A)
3	Common Ground
4	DC Power IN
5	Analog Output
Case	Case GND

Phone: 1-800-473-7313
Email: sales@sucoesi.com

Hipres® HP1400/1500 RS-485 High Pressure Transmitter

Technical Data

Type:	HP1400/HP1410	HP1500/HP1510
Sensor Technology:	Silicon-on-Sapphire	
Output Signal (Digital):	Proprietary RS-485 Protocol	Modbus RTU
Digital Signal Baud Rate:	9600, 14400, 19200, 28800, 57600, 115200, 230400	
Output Signal (Analogue):	0– 5V analog output, 16bit	
Sample Rate:	5Hz (max – digital), 1KHz (max – analog)	
Zero Output:	0V	
Full Scale Output:	5V	
Calibration Output:	Combination of digital and analog signal	
Zero Adjustment Range:	Available	
Span Adjustment Range:	Available	
Supply Voltage:	6-36 VDC	
Pressure Reference:	Gauge	
Protection of Supply Voltage:	Supply: up 36V Analog Output: -0.3V to 5.3V Digital Output: ±15KV ESD	
Standard Pressure Ranges (bar):	HP1400: 0 – 600 bar; 0 – 700 bar; 0 – 1000 bar; 0 – 1500 bar; 0-2000 bar. HP1410: 0 – 2500 bar; 0 – 4000 bar; 0 – 5000 bar (other ranges available)	
Standard Pressure Ranges (psi):	HP1400: 0-10000 psi; 0-15000 psi; 0-20000 psi; 0-30000 psi. HP1410: 0-40000 psi; 0-60000 psi; 0-72000 psi (other ranges available)	
Overpressure Safety:	1.5x for ranges 0 – 600 bar to 0 – 3000 bar; 1.25x for 4000 bar; 1.2x for 5000 bar	
Load Driving Capability:	**4 – 20 mA:** $R_L < [U_B - 10\ V] / 20\ mA$ (e.g. with supply voltage (U_B) of 36 V, max. load (R_L) is 1300 Ω); **10 mV/V:** n/a; **0 – 5 V:** max. load $R_L > 5\ K\Omega$; **0 – 10 V:** max. load $R_L > 10\ K\Omega$	
Accuracy NLHR:	digital: ±0.15% of span BFSL, analog: ±0.25% of span BFSL	
Zero Offset and Span Tolerance:	±0.6% FS	
Operating Ambient Temperature:	-40°C to +85°C (-40°F to +185°F)	
Operating Media Temperature:	-50°C to +125°C (-58 °F to +257 °F)	
Storage Temperature:	+5°C to +40°C (+41°F to +104°F) Recommended Best Practice	
Temperature Effects:	±1.5 %FS total error band for -20°C to +70°C. Typical thermal zero and span coefficients ±0.015 %FS/ °C	
Electromagnetic Compatibility:	Emissions: BS EN61000-6-3 Immunity: BS EN61000-6-2 Certification: CE/UKCA Marked	
Insulation Resistance:	> 100 MΩ @ 50 VDC	
Response time 10-90 %:	(1000/update rate) + 1ms, <17ms	
Bus Addressing:	User Programmable	
Wetted Parts:	Titanium alloy machined from a single piece (≥1000 bar); Titanium alloy and SAE 316 stainless steel (<1000 bar)	
Pressure Media:	All fluids compatible with Titanium alloy (≥1000 bar); All fluids compatible with Titanium alloy and SAE 316 stainless steel (<1000 bar)	
Pressure Connection:	F250-C Autoclave fitting; thread type 9/16-18UNF-2B female or M16 x 1.5 female cone seal	
Electrical Connection:	M12, 5 pin connector	
Net. Weight (Kg):	<0.2 kg	

Phone: 1-800-473-7313
Email: sales@sucoesi.com

Hipres® HP1400/1500 RS-485 High Pressure Transmitter

Order Matrix

Output		Wires	Type	Options	Pressure Range	Process Connection
RS485	Model up to 2,000 bar (incl. 30,000 psi)	5	HP1400			
	Model above 2,000 bar	5	HP1410			
Modbus	Model up to 2,000 bar (incl. 30,000 psi)	5	HP1500			
	Model above 2,000 bar	5	HP1510			

Options	
M12 connector (IP67 when mated with equivalent connector)	B

Pressure Range	
0-600 bar	0600
0-1000 bar	1000
0-1500 bar	1500
0-2000 bar	2000
0-3000 bar	3000
0-4000 bar	4000
0-5000 bar	5000

Process Connection	
Autoclave F-250-C female	DE
M16 x 1.5 female cone seal	FK

Order Number Example	HP1500B2000DE

For options not listed please contact the sales team

DISCLAIMER : ESI Technology Ltd operates a policy of continuous product development. We reserve the right to change specification without prior notice. All products manufactured by ESI Technology Ltd are calibrated using precision calibration equipment, traceable to national measurement standards.

Phone: 1-800-473-7313
Email: sales@sucoesi.com